FORM NO. A11-147 REV. 9
Supersedes Form No. A11-147 Rev. 8

CONDENSING UNITS

CLASSIC X® CONDENSING UNITS

Seven Models

Cooling Capacities
17,000 to 56,500 BTU/HR
[4.98 kW] to [16.56 kW]

RAKA- SERIES

Nominal Sizes 1½ to 5 Tons
[5.28 kW] to [17.58 kW]

The Rheem® Classic X RAKA- Condensing Unit was designed with performance in mind. These units offer comfort, energy conservation and dependability for single, multi-family and light commercial applications.

- Attractive, louvered wrap-around jacket protects the coil from yard hazards and weather extremes. Top grille is steel reinforced for extra strength. Cabinet is powder painted for all-weather protection.
- Air is discharged upward away from bushes and shrubs. The discharge pattern of the top grille provides minimum air restriction, resulting in quiet fan operation.
- Exclusive Combination Grille/Motor Mount secures the motor to the underside of the discharge grille. The grille protects the motor windings and bearings from rain and snow.
- All controls are accessible by removing one service panel. Removable top grille provides access to the condenser fan motor and condenser coil.
- Single speed motor designed for low speed, quiet, energy-saving operation.

Accredited by the RvA
ABS Quality Evaluations, Inc. Management System Certification
ANSI-RAB OMS ACCREDITED
ISO 9002
Certificate Number: 30164

c UL us LISTED

*"CERTIFIED UNDER THE A.R.I. CERTIFICATION PROGRAM—A.R.I. STANDARD 210"

*575 VOLT MODELS ARE NOT A.R.I. CERTIFIED

All controls and compressor are accessible for servicing by removal of the service panel. (Unit pictured with field installed high and low pressure controls and filter drier.)

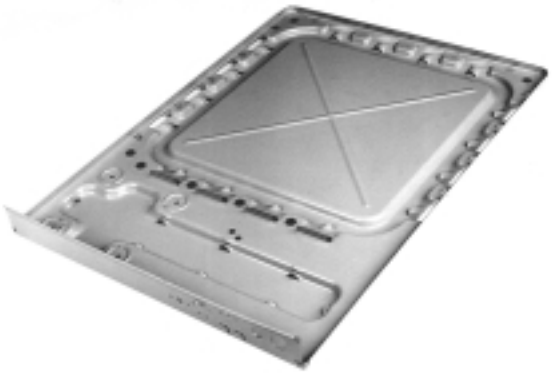

Drawn Painted Base Pan.

COPELAND® SCROLL® COMPRESSOR

The Copeland scroll compressor is the key to efficiency for this Rheem model. It's the latest in high-efficiency compressor technology. The advanced scroll compressor offers low noise and vibration characteristics and features tolerance to liquid refrigerant and system contamination. The Copeland Scroll also has low start torque, eliminating start problems in the field. And its unique design enables the RAKA-Condensing unit to perform more efficiently.

Engineering Features

RAKA- Series Condensing Units

1. Compressor is hermetically sealed and incorporates internal high temperature motor overload protection, and durable insulation on the motor windings. It is externally mounted on rubber grommets to reduce vibration and noise.
2. All refrigerant connections are on the exterior of the unit, located close to the ground for neat appearing installations.
3. Cabinet is constructed of powder painted galvanized steel. The full wraparound louvered grille protects the coil from damage.
4. Copper Tube—Aluminum Fin coils are used on all models.
5. The control box is located in the top corner of the cabinet providing for easy access through a service panel.
6. Service valves are standard on all models.
7. Power and control wiring are kept separate.
8. Every unit is factory charged and tested.
9. Separate compressor compartment for easy service access.
10. Drawn, painted base pan for extra corrosion resistance and sound reduction.

Field Installed Accessories

- **Compressor Time Delay Control**—Compressor will remain off for five minutes after power or thermostat interruption, allowing system pressures to equalize. (Model No. RXMD-B01) (3-phase models only).
- **Low Ambient Switch**—Cycles outdoor fan to maintain adequate condensing pressures assuring liquid refrigerant flow to the coil. Allows indoor cooling with outdoor temperatures down to 0°F [–17.8°C]. (Model No. RXAD-A04)

  It is recommended that this control be installed in units to be operated at outdoor ambient temperatures under 65°F [18°C].
- **High Pressure Control**—(Model No. RXAB-A03)
- **Low Pressure Control**—Deactivates system if refrigerant loss occurs. (Model No. RXAC-A03)
- **Crankcase Heater**—Available through the Universal Parts® Department.
- **Start Kit**—Available through the Universal Parts® Department.

[ ] Designates Metric Conversions

Model Number Identification

R	A	K	A	—	024	J	A	Z
RHEEM	CONDENSING UNIT	TYPE–K STANDARD EFFICIENCY	DESIGN SERIES		NOMINAL COOLING CAPACITY	ELECTRICAL DESIGNATION	VARIATIONS	
					018 = 18,000 BTU/HR [5.28 kW] 024 = 24,000 BTU/HR [7.03 kW] 030 = 30,000 BTU/HR [8.79 kW] 036/037 = 36,000 BTU/HR [10.55 kW] 042 = 42,000 BTU/HR [12.31 kW] 048 = 48,000 BTU/HR [14.07 kW] 060 = 60,000 BTU/HR [17.58 kW]	J = 208-230-1-60 C = 208-230-3-60 D = 460-3-60 Y = 575-3-60	A = STANDARD MODEL	Z = COPELAND ZR SCROLL COMPRESSOR S = SWEAT CONNECTION

BEFORE PURCHASING THIS APPLIANCE, READ IMPORTANT ENERGY COST AND EFFICIENCY INFORMATION AVAILABLE FROM YOUR RETAILER.

Performance Data @ ARI Standard Conditions—Cooling

Model Numbers		80°F [26.5°C] DB/67°F [19.5°C] WB Indoor Air 95°F [35°C] DB Outdoor Air					Sound Rating	Indoor CFM [L/s]
Outdoor Unit RAKA-	Indoor Coil and/or Air Handler	Total Capacity BTU/H [kW]	Net Sensible BTU/H [kW]	Net Latent BTU/H [kW]	EER	SEER		
018JAZ	RCAB-A021 (RHQA-08)	17,600 [5.16]	12,300 [3.60]	5,300 [1.56]	9.80	10.00	7.2	600 [285]
	RCBA-2457 ①	17,000 [4.98]	12,000 [3.52]	5,000 [1.46]	9.50	10.00	7.2	600 [285]
	RCBA-2457 (RBHA-14)	17,200 [5.04]	12,200 [3.58]	5,000 [1.46]	9.65	10.10	7.2	600 [285]
	RCBA-2457 (RBHC-14)	17,900 [5.25]	13,100 [3.84]	4,800 [1.41]	9.60	10.50	7.2	600 [285]
	RCBA-2457 (RBHC-15)	17,900 [5.25]	13,100 [3.84]	4,800 [1.41]	9.60	10.50	7.2	600 [285]
	RCBA-2457 + RXMD-C02	17,000 [4.98]	12,000 [3.52]	5,000 [1.46]	9.50	10.10	7.2	600 [285]
	RCBA-2457 + RXMD-C02 (RBHA-14)	17,200 [5.04]	12,200 [3.58]	5,000 [1.46]	9.65	10.20	7.2	600 [285]
	RCBA-2457 + RXMD-C02 (RBHC-14)	17,900 [5.25]	13,100 [3.84]	4,800 [1.41]	9.60	10.60	7.2	600 [285]
	RCBA-2457 + RXMD-C02 (RBHC-15)	17,900 [5.25]	13,100 [3.84]	4,800 [1.41]	9.60	10.60	7.2	600 [285]
	RCGA-24A1	16,900 [4.95]	11,800 [3.46]	5,100 [1.49]	9.35	10.00	7.2	600 [285]
	RCGA-24A1 (RBHA-14)	17,000 [4.98]	11,900 [3.49]	5,100 [1.49]	9.50	10.20	7.2	600 [285]
	RCGA-24A1 (RBHC-14)	17,700 [5.19]	13,000 [3.81]	4,700 [1.38]	9.60	10.60	7.2	600 [285]
	RCGA-24A1 (RBHC-15)	17,700 [5.19]	13,000 [3.81]	4,700 [1.38]	9.60	10.60	7.2	600 [285]
	RCHA-24A1	16,900 [4.95]	11,800 [3.46]	5,100 [1.49]	9.35	10.00	7.2	600 [285]
	RCHA-24A1 (RBHA-14)	17,000 [4.98]	11,900 [3.49]	5,100 [1.49]	9.50	10.20	7.2	600 [285]
	RCHA-24A1 (RBHC-14)	17,700 [5.19]	13,000 [3.81]	4,700 [1.38]	9.60	10.60	7.2	600 [285]
	RCHA-24A1 (RBHC-15)	17,700 [5.19]	13,000 [3.81]	4,700 [1.38]	9.60	10.60	7.2	600 [285]
	RCLB-A024	18,100 [5.30]	12,900 [3.78]	5,200 [1.52]	9.60	10.00	7.2	600 [285]
	RCTB-A018	17,100 [5.01]	11,800 [3.46]	5,300 [1.55]	9.00	10.00	7.2	600 [285]
	RCTB-A018 (RHQA-08)	17,400 [5.10]	12,100 [3.55]	5,300 [1.55]	9.60	10.35	7.2	600 [285]
	RCTH-A024	17,500 [5.13]	12,600 [3.69]	4,900 [1.44]	9.50	10.30	7.2	600 [285]
024JAZ	RCBA-2457 ①	22,800 [6.68]	16,500 [4.84]	6,300 [1.84]	9.05	10.00	7.2	800 [380]
	RCBA-2457 (RBHA-14)	23,000 [6.74]	16,700 [4.89]	6,300 [1.84]	9.25	10.15	7.2	800 [380]
	RCBA-2457 (RBHC-14)	23,400 [6.86]	17,000 [4.98]	6,400 [1.88]	9.10	10.00	7.2	800 [380]
	RCBA-2457 (RBHC-15)	23,400 [6.86]	17,000 [4.98]	6,400 [1.88]	9.10	10.00	7.2	800 [380]
	RCBA-2457 + RXMD-C02	22,800 [6.68]	16,500 [4.84]	6,300 [1.84]	9.05	10.10	7.2	800 [380]
	RCBA-2457 + RXMD-C02 (RBHA-14)	23,000 [6.74]	16,700 [4.89]	6,300 [1.84]	9.25	10.25	7.2	800 [380]
	RCBA-2457 + RXMD-C02 (RBHC-14)	23,400 [6.86]	17,000 [4.98]	6,400 [1.88]	9.10	10.10	7.2	800 [380]
	RCBA-2457 + RXMD-C02 (RBHC-15)	23,400 [6.86]	17,000 [4.98]	6,400 [1.88]	9.10	10.10	7.2	800 [380]
	RCGA-24A2	22,600 [6.62]	16,000 [4.69]	6,600 [1.93]	8.75	10.00	7.2	800 [380]
	RCGA-24A2 (RBHA-14)	22,800 [6.68]	16,200 [4.75]	6,600 [1.93]	8.90	10.15	7.2	800 [380]
	RCGA-24A2 (RBHC-14)	23,200 [6.80]	16,900 [4.95]	6,300 [1.84]	9.10	10.00	7.2	800 [380]
	RCGA-24A2 (RBHC-15)	23,200 [6.80]	16,900 [4.95]	6,300 [1.84]	9.10	10.00	7.2	800 [380]
	RCHA-24A2	22,600 [6.62]	16,000 [4.69]	6,600 [1.93]	8.75	10.00	7.2	800 [380]
	RCHA-24A2 (RBHA-14)	22,800 [6.68]	16,200 [4.75]	6,600 [1.93]	8.90	10.15	7.2	800 [380]
	RCHA-24A2 (RBHC-14)	23,200 [6.80]	16,900 [4.95]	6,300 [1.84]	9.10	10.00	7.2	800 [380]
	RCHA-24A2 (RBHC-15)	23,200 [6.80]	16,900 [4.95]	6,300 [1.84]	9.10	10.00	7.2	800 [380]
	RCLB-A024	23,400 [6.86]	17,100 [5.01]	6,300 [1.84]	9.15	10.00	7.2	800 [380]
	RCLB-A024 (RHQA-08)	23,800 [6.98]	17,500 [51.3]	6,300 [1.84]	9.70	10.15	7.2	800 [380]
	RCTB-A024	23,000 [6.74]	16,500 [4.84]	6,500 [1.90]	8.85	10.00	7.2	800 [380]
	RCTB-A024 (RHQA-08)	23,400 [6.86]	16,900 [4.95]	6,500 [1.90]	9.35	10.15	7.2	800 [380]
	RCTH-A024	23,200 [6.80]	16,800 [4.92]	6,400 [1.88]	8.90	10.00	7.2	800 [380]
030JAZ	RCBA-3765 ①	28,200 [8.26]	21,200 [6.21]	7,000 [2.05]	9.60	10.00	7.4	1,000 [470]
	RCBA-3765 (RBHA-17)	28,400 [8.32]	21,400 [6.27]	7,000 [2.05]	9.85	10.20	7.4	1,000 [470]
	RCBA-3765 (RBHC-17)	28,200 [8.26]	21,300 [6.24]	6,900 [2.02]	9.70	10.60	7.4	1,000 [470]
	RCBA-3765 (RBHC-18)	28,200 [8.26]	21,300 [6.24]	6,900 [2.02]	9.70	10.60	7.4	1,000 [470]
	RCBA-3765 + RXMD-C02	28,200 [8.26]	21,200 [6.21]	7,000 [2.05]	9.60	10.10	7.4	1,000 [470]
	RCBA-3765 + RXMD-C02 (RBHA-17)	28,400 [8.32]	21,400 [6.27]	7,000 [2.05]	9.85	10.30	7.4	1,000 [470]
	RCBA-3765 + RXMD-C02 (RBHC-17)	28,200 [8.26]	21,300 [6.24]	6,900 [2.02]	9.70	10.70	7.4	1,000 [470]
	RCBA-3765 + RXMD-C02 (RBHC-18)	28,200 [8.26]	21,300 [6.24]	6,900 [2.02]	9.70	10.70	7.4	1,000 [470]
	RCGA-37A1	28,200 [8.26]	20,600 [6.04]	7,600 [2.22]	9.55	10.00	7.4	1,000 [470]
	RCGA-37A1 (RBHA-17)	28,400 [8.32]	20,800 [6.10]	7,600 [2.22]	9.80	10.20	7.4	1,000 [470]
	RCGA-37A1 (RBHC-17)	28,000 [8.21]	21,100 [6.18]	6,900 [2.02]	9.70	10.60	7.4	1,000 [470]
	RCGA-37A1 (RBHC-18)	28,000 [8.21]	21,100 [6.18]	6,900 [2.02]	9.70	10.60	7.4	1,000 [470]
	RCHA-36A1	28,200 [8.26]	20,600 [6.04]	7,600 [2.22]	9.55	10.00	7.4	1,000 [470]
	RCHA-36A1 (RBHA-17)	28,800 [8.44]	21,200 [6.21]	7,600 [2.22]	9.80	10.20	7.4	1,000 [470]
	RCHA-36A1 (RBHC-17)	28,000 [8.21]	21,100 [6.18]	6,900 [2.02]	9.70	10.60	7.4	1,000 [470]
	RCHA-36A1 (RBHC-18)	28,000 [8.21]	21,100 [6.18]	6,900 [2.02]	9.70	10.60	7.4	1,000 [470]
	RCLB-A030	29,000 [8.50]	22,200 [6.51]	6,800 [1.99]	9.75	10.00	7.4	1,000 [470]
	RCLB-A030 (RHQA-13)	29,200 [8.56]	22,400 [6.56]	6,800 [1.99]	10.00	10.30	7.4	1,000 [470]
	RCTB-A036	29,000 [8.50]	21,800 [6.39]	7,200 [2.11]	9.70	10.20	7.4	1,000 [470]
	RCTB-A036 (RHQA-13)	29,200 [8.56]	22,000 [6.45]	7,200 [2.11]	9.95	10.50	7.4	1,000 [470]
	RCTH-A036	29,000 [8.50]	21,800 [6.39]	7,200 [2.11]	9.70	10.20	7.4	1,000 [470]

① Highest sales volume tested combination required by D.O.E. test procedures.

[ ] Designates Metric Conversions

Performance Data @ ARI Standard Conditions—Cooling (Con't.)

Model Numbers		80°F [26.5°C] DB/67°F [19.5°C] WB Indoor Air 95°F [35°C] DB Outdoor Air					Sound Rating	Indoor CFM [L/s]
Outdoor Unit RAKA-	Indoor Coil and/or Air Handler	Total Capacity BTU/H [kW]	Net Sensible BTU/H [kW]	Net Latent BTU/H [kW]	EER	SEER		
037CAZ/DAZ	RCBA-3765 ①	35,400 [10.37]	25,200 [7.39]	10,200 [2.99]	9.50	10.00	7.8	1,200 [565]
	RCBA-3765 (RBHA-17)	35,600 [10.43]	25,400 [7.44]	10,200 [2.99]	9.70	10.15	7.8	1,200 [565]
	RCBA-3765 (RBHC-17)	34,400 [10.08]	25,000 [7.33]	9,400 [2.75]	9.00	10.00	7.8	1,200 [565]
	RCBA-3765 (RBHC-18)	34,400 [10.08]	25,000 [7.33]	9,400 [2.75]	9.00	10.00	7.8	1,200 [565]
	RCBA-3765 + RXMD-C02	35,400 [10.37]	25,200 [7.39]	10,200 [2.99]	9.50	10.05	7.8	1,200 [565]
	RCBA-3765 + RXMD-C02 (RBHA-17)	35,600 [10.43]	25,400 [7.44]	10,200 [2.99]	9.70	10.20	7.8	1,200 [565]
	RCBA-3765 + RXMD-C02 (RBHC-17)	34,400 [10.08]	25,000 [7.33]	9,400 [2.75]	9.00	10.10	7.8	1,200 [565]
	RCBA-3765 + RXMD-C02 (RBHC-18)	34,400 [10.08]	25,000 [7.33]	9,400 [2.75]	9.00	10.10	7.8	1,200 [565]
	RCGA-36A2	35,000 [10.26]	24,800 [7.27]	10,200 [2.99]	9.60	10.50	7.8	1,200 [565]
	RCGA-36A2 (RBHA-17)	35,200 [10.32]	25,000 [7.33]	10,200 [2.99]	9.70	10.70	7.8	1,200 [565]
	RCGA-36A2 (RBHC-17)	34,200 [10.02]	24,900 [7.30]	9,300 [2.72]	9.00	10.30	7.8	1,200 [565]
	RCGA-36A2 (RBHC-18)	34,200 [10.02]	24,900 [7.30]	9,300 [2.72]	9.00	10.30	7.8	1,200 [565]
	RCHA-36A1	35,000 [10.26]	24,800 [7.27]	10,200 [2.99]	9.60	10.50	7.8	1,200 [565]
	RCHA-36A1 (RBHA-17)	35,200 [10.32]	25,000 [7.33]	10,200 [2.99]	9.70	10.70	7.8	1,200 [565]
	RCHA-36A2	35,000 [10.26]	24,800 [7.27]	10,200 [2.99]	9.60	10.50	7.8	1,200 [565]
	RCHA-36A2 (RBHC-17)	34,200 [10.02]	24,900 [7.30]	9,300 [2.72]	9.00	10.30	7.8	1,200 [565]
	RCHA-36A2 (RBHC-18)	34,200 [10.02]	24,900 [7.30]	9,300 [2.72]	9.00	10.30	7.8	1,200 [565]
	RCTH-A036	35,400 [10.37]	25,200 [7.39]	10,200 [2.99]	9.60	10.50	7.8	1,200 [565]
037JAZ	RCBA-3765 ①	35,400 [10.37]	25,200 [7.39]	10,200 [2.99]	9.50	10.00	7.8	1,200 [565]
	RCBA-3765 (RBHA-17)	35,600 [10.43]	25,400 [7.44]	10,200 [2.99]	9.70	10.15	7.8	1,200 [565]
	RCBA-3765 (RBHC-17)	34,000 [10.08]	25,000 [7.33]	9,400 [2.75]	9.00	10.00	7.8	1,200 [565]
	RCBA-3765 (RBHC-18)	34,000 [10.08]	25,000 [7.33]	9,400 [2.75]	9.00	10.00	7.8	1,200 [565]
	RCBA-3765 + RXMD-C02	35,400 [10.37]	25,200 [7.39]	10,200 [2.99]	9.50	10.05	7.8	1,200 [565]
	RCBA-3765 + RXMD-C02 (RBHA-17)	35,600 [10.43]	25,400 [7.44]	10,200 [2.99]	9.70	10.20	7.8	1,200 [565]
	RCBA-3765 + RXMD-C02 (RBHC-17)	34,400 [10.08]	25,000 [7.33]	9,400 [2.75]	9.00	10.10	7.8	1,200 [565]
	RCBA-3765 + RXMD-C02 (RBHC-18)	34,400 [10.08]	25,000 [7.33]	9,400 [2.75]	9.00	10.10	7.8	1,200 [565]
	RCGA-36A2	35,000 [10.26]	24,800 [7.27]	10,200 [2.99]	9.60	10.50	7.8	1,200 [565]
	RCGA-36A2 (RBHA-17)	35,200 [10.32]	25,000 [7.33]	10,200 [2.99]	9.70	10.70	7.8	1,200 [565]
	RCGA-36A2 (RBHC-17)	34,200 [10.02]	24,900 [7.30]	9,300 [2.72]	9.00	10.30	7.8	1,200 [565]
	RCGA-36A2 (RBHC-18)	34,200 [10.02]	24,900 [7.30]	9,300 [2.72]	9.00	10.30	7.8	1,200 [565]
	RCHA-36A1	35,000 [10.26]	24,800 [7.27]	10,200 [2.99]	9.60	10.50	7.8	1,200 [565]
	RCHA-36A1 (RBHA-17)	35,200 [10.32]	25,000 [7.33]	10,200 [2.99]	9.70	10.70	7.8	1,200 [565]
	RCHA-36A2	35,000 [10.26]	24,800 [7.27]	10,200 [2.99]	9.60	10.50	7.8	1,200 [565]
	RCHA-36A2 (RBHA-17)	35,200 [10.32]	25,000 [7.33]	10,200 [2.99]	9.70	10.70	7.8	1,200 [565]
	RCHA-36A2 (RBHC-17)	34,200 [10.02]	24,900 [7.30]	9,300 [2.72]	9.00	10.30	7.8	1,200 [565]
	RCHA-36A2 (RBHC-18)	34,200 [10.02]	24,900 [7.30]	9,300 [2.72]	9.00	10.30	7.8	1,200 [565]
	RCLB-A036	35,600 [10.43]	25,654 [7.52]	9,946 [2.91]	9.40	10.00	7.8	1,200 [565]
	RCLB-A036 (RHQA-13)	35,600 [10.43]	25,654 [7.52]	9,946 [2.91]	9.40	10.05	7.8	1,200 [565]
	RCTB-A036	35,400 [10.37]	25,454 [7.46]	9,946 [2.91]	9.35	10.10	7.8	1,200 [565]
	RCTB-A036 (RHQA-13)	35,400 [10.37]	25,454 [7.46]	9,946 [2.91]	9.40	10.15	7.8	1,200 [565]
	RCTB-A037	36,600 [10.73]	26,780 [7.85]	9,820 [2.88]	9.60	10.15	7.8	1,200 [565]
	RCTH-A036	35,400 [10.37]	25,586 [7.50]	9,804 [2.87]	9.35	10.00	7.8	1,200 [565]
042CAS/DAS/CAZ/DAZ/JAZ	RCBA-4882 ①	40,000 [11.72]	28,900 [8.47]	11,100 [3.25]	9.20	10.00	7.8	1,400 [660]
	RCBA-4882 (RBHA-21)	40,500 [11.87]	29,400 [8.62]	11,100 [3.25]	9.45	10.25	7.8	1,400 [660]
	RCBA-4882 (RBHC-21)	40,000 [11.72]	29,000 [8.50]	11,000 [3.22]	9.10	10.00	7.8	1,400 [660]
	RCBA-4882 (RBHC-22)	40,000 [11.72]	29,000 [8.50]	11,000 [3.22]	9.10	10.00	7.8	1,400 [660]
	RCBA-4882 + RXMD-C02	40,000 [11.72]	28,900 [8.47]	11,100 [3.25]	9.20	10.05	7.8	1,400 [660]
	RCBA-4882 + RXMD-C02 (RBHA-21)	40,500 [11.87]	29,400 [8.62]	11,100 [3.25]	9.45	10.30	7.8	1,400 [660]
	RCBA-4882 + RXMD-C02 (RBHC-21)	40,000 [11.72]	29,000 [8.50]	11,000 [3.22]	9.10	10.10	7.8	1,400 [660]
	RCBA-4882 + RXMD-C02 (RBHC-22)	40,000 [11.72]	29,000 [8.50]	11,000 [3.22]	9.10	10.10	7.8	1,400 [660]
	RCGA-48A1	39,500 [11.58]	28,200 [8.26]	11,300 [3.32]	9.15	10.30	7.8	1,400 [660]
	RCGA-48A1 (RBHA-21)	40,000 [11.72]	28,700 [8.41]	11,300 [3.32]	9.40	10.55	7.8	1,400 [660]
	RCGA-48A1 (RBHC-21)	39,500 [11.58]	28,300 [8.29]	11,200 [3.29]	9.05	10.10	7.8	1,400 [660]
	RCGA-48A1 (RBHC-22)	39,500 [11.58]	28,300 [8.29]	11,200 [3.29]	9.05	10.10	7.8	1,400 [660]
	RCHA-48A1	39,500 [11.58]	28,200 [8.26]	11,300 [3.32]	9.15	10.30	7.8	1,400 [660]
	RCHA-48A1 (RBHA-21)	40,000 [11.72]	28,700 [8.41]	11,300 [3.32]	9.40	10.55	7.8	1,400 [660]
	RCHA-48A1 (RBHC-21)	39,500 [11.58]	28,300 [8.29]	11,200 [3.29]	9.05	10.10	7.8	1,400 [660]
	RCHA-48A1 (RBHC-22)	39,500 [11.58]	28,300 [8.29]	11,200 [3.29]	9.05	10.10	7.8	1,400 [660]
	RCHA-48A1 (RBHC-22)	39,500 [11.58]	28,300 [8.29]	11,200 [3.29]	9.05	10.10	7.8	1,400 [660]
	RCLB-A048 (RHQA-16)	40,000 [11.72]	28,812 [8.44]	11,188 [3.28]	9.30	10.10	7.8	1,400 [660]
	RCMB-A048 (RHQA-16)	40,500 [11.87]	29,312 [8.59]	11,188 [3.28]	9.40	10.15	7.8	1,400 [660]
	RCTB-A048 (RHQA-16)	40,000 [11.72]	29,089 [8.53]	10,911 [3.19]	9.30	10.05	7.8	1,400 [660]
	RCTH-A048	39,500 [11.58]	28,200 [8.26]	11,300 [3.32]	9.20	10.30	7.8	1,400 [660]

① Highest sales volume tested combination required by D.O.E. test procedures.

[ ] Designates Metric Conversions

Performance Data @ ARI Standard Conditions—Cooling (Con't.)

Model Numbers		80°F [26.5°C] DB/67°F [19.5°C] WB Indoor Air 95°F [35°C] DB Outdoor Air					Sound Rating	Indoor CFM [L/s]
Outdoor Unit RAKA-	Indoor Coil and/or Air Handler	Total Capacity BTU/H [kW]	Net Sensible BTU/H [kW]	Net Latent BTU/H [kW]	EER	SEER		
048CAS/DAS/ CAZ/DAZ/JAZ	RCBA-4882 ①	46,000 [13.48]	33,200 [9.73]	12,800 [3.75]	9.65	10.00	8.0	1,600 [755]
	RCBA-4882 (RBHA-21)	46,000 [13.48]	33,200 [9.73]	12,800 [3.75]	9.75	10.10	8.0	1,600 [755]
	RCBA-4882 (RBHC-21)	45,500 [13.33]	32,800 [9.61]	12,700 [3.72]	9.45	10.00	8.0	1,600 [755]
	RCBA-4882 (RBHC-22)	45,500 [13.33]	32,800 [9.61]	12,700 [3.72]	9.45	10.00	8.0	1,600 [755]
	RCBA-4882 + RXMD-C02	46,000 [13.48]	33,200 [9.73]	12,800 [3.75]	9.65	10.10	8.0	1,600 [755]
	RCBA-4882 + RXMD-C02 (RBHA-21)	46,000 [13.48]	33,200 [9.73]	12,800 [3.75]	9.75	10.20	8.0	1,600 [755]
	RCBA-4882 + RXMD-C02 (RBHC-21)	45,500 [13.33]	32,800 [9.61]	12,700 [3.72]	9.45	10.10	8.0	1,600 [755]
	RCBA-4882 + RXMD-C02 (RBHC-22)	45,500 [13.33]	32,800 [9.61]	12,700 [3.72]	9.45	10.10	8.0	1,600 [755]
	RCGA-48A1	46,000 [13.48]	33,000 [9.67]	13,000 [3.81]	9.70	10.30	8.0	1,600 [755]
	RCGA-48A1 (RBHA-21)	46,000 [13.48]	33,000 [9.67]	13,000 [3.81]	9.80	10.40	8.0	1,600 [755]
	RCGA-48A1 (RBHC-21)	45,500 [13.33]	32,600 [9.55]	12,900 [3.78]	9.50	10.10	8.0	1,600 [755]
	RCGA-48A1 (RBHC-22)	45,500 [13.33]	32,600 [9.55]	12,900 [3.78]	9.50	10.10	8.0	1,600 [755]
	RCHA-48A1	46,000 [13.48]	33,000 [9.67]	13,000 [3.81]	9.70	10.30	8.0	1,600 [755]
	RCHA-48A1 (RBHA-21)	46,000 [13.48]	33,000 [9.67]	13,000 [3.81]	9.80	10.20	8.0	1,600 [755]
	RCHA-48A1 (RBHC-21)	45,500 [13.33]	32,600 [9.55]	12,900 [3.78]	9.50	10.10	8.0	1,600 [755]
	RCHA-48A1 (RBHC-22)	45,500 [13.33]	32,600 [9.55]	12,900 [3.78]	9.50	10.10	8.0	1,600 [755]
	RCLB-A048	45,500 [13.33]	33,200 [9.73]	12,300 [3.60]	9.65	10.00	8.0	1,600 [755]
	RCLB-B048	46,000 [13.48]	33,400 [9.79]	12,600 [3.69]	9.70	10.00	8.0	1,600 [755]
	RCMB-A048	46,000 [13.48]	33,400 [9.79]	12,600 [3.69]	9.70	10.00	8.0	1,600 [755]
	RCMB-A048 (RHQA-16)	46,000 [13.48]	33,400 [9.79]	12,600 [3.69]	9.95	10.10	8.0	1,600 [755]
	RCTB-A048	46,000 [13.48]	33,600 [9.85]	12,400 [3.63]	9.65	10.30	8.0	1,600 [755]
	RCTB-A048 (RHQA-16)	46,000 [13.48]	33,600 [9.85]	12,400 [3.63]	9.95	10.40	8.0	1,600 [755]
	RCTH-A048	46,500 [13.63]	33,800 [9.91]	12,700 [3.72]	9.80	10.30	8.0	1,600 [755]
048YAS	RCBA-4882 ①	46,500 [13.63]	35,800 [10.49]	10,700 [3.13]	9.45	10.00	8.0	1,600 [755]
	RCBA-4882 (RBHA-21)	47,000 [13.77]	36,300 [10.64]	10,700 [3.13]	9.75	10.20	8.0	1,600 [755]
	RCBA-4882 (RBHC-21)	45,500 [13.33]	32,800 [9.61]	12,700 [3.72]	9.45	10.00	8.0	1,600 [755]
	RCBA-4882 (RBHC-22)	45,500 [13.33]	32,800 [9.61]	12,700 [3.72]	9.45	10.00	8.0	1,600 [755]
	RCBA-4882 + RXMD-C02	46,500 [13.63]	35,800 [10.49]	10,700 [3.13]	9.45	10.10	8.0	1,600 [755]
	RCBA-4882 + RXMD-C02 (RBHA-21)	47,000 [13.77]	36,300 [10.64]	10,700 [3.13]	9.75	10.30	8.0	1,600 [755]
	RCBA-4882 + RXMD-C02 (RBHC-21)	45,500 [13.33]	32,800 [9.61]	12,700 [3.72]	9.45	10.10	8.0	1,600 [755]
	RCBA-4882 + RXMD-C02 (RBHC-22)	45,500 [13.33]	32,800 [9.61]	12,700 [3.72]	9.45	10.10	8.0	1,600 [755]
	RCGA-48A1	46,000 [13.48]	33,920 [9.94]	12,080 [3.54]	9.40	10.00	8.0	1,600 [755]
	RCGA-48A1 (RBHA-21)	46,500 [13.63]	34,420 [10.09]	12,080 [3.54]	9.65	10.20	8.0	1,600 [755]
	RCGA-48A1 (RBHC-21)	45,500 [13.33]	32,600 [9.55]	12,900 [3.78]	9.50	10.10	8.0	1,600 [755]
	RCGA-48A1 (RBHC-22)	45,500 [13.33]	32,600 [9.55]	12,900 [3.78]	9.50	10.10	8.0	1,600 [755]
	RCHA-48A1	46,000 [13.48]	33,920 [9.94]	12,080 [3.54]	9.40	10.00	8.0	1,600 [755]
	RCHA-48A1 (RBHA-21)	46,500 [13.63]	34,420 [10.09]	12,080 [3.54]	9.65	10.20	8.0	1,600 [755]
	RCHA-48A1 (RBHC-21)	45,500 [13.33]	32,600 [9.55]	12,900 [3.78]	9.50	10.10	8.0	1,600 [755]
	RCHA-48A1 (RBHC-22)	45,500 [13.33]	32,600 [9.55]	12,900 [3.78]	9.50	10.10	8.0	1,600 [755]
	RCLB-A048	46,000 [13.48]	34,500 [10.11]	11,500 [3.37]	9.45	10.00	8.0	1,550 [730]
	RCLB-B048	47,000 [13.77]	35,300 [10.35]	11,700 [3.42]	9.55	10.10	8.0	1,550 [730]
	RCMB-A048	47,000 [13.77]	35,300 [10.35]	11,700 [3.42]	9.50	10.15	8.0	1,550 [730]
	RCMB-A048 (RHQA-16)	47,500 [13.92]	35,800 [10.49]	11,700 [3.43]	9.70	10.40	8.0	1,550 [730]
	RCTB-A048	46,500 [13.63]	35,100 [10.29]	11,400 [3.34]	9.35	10.35	8.0	1,550 [730]
	RCTB-A048 (RHQA-16)	46,500 [13.63]	35,200 [10.32]	11,300 [3.31]	9.65	10.65	8.0	1,550 [730]
	RCTH-A048	47,000 [13.77]	35,500 [10.40]	11,500 [3.37]	9.50	10.45	8.0	1,550 [730]
060CAS/DAS	RCBA-6089 ①	56,000 [16.41]	43,100 [12.63]	12,900 [3.78]	9.45	10.00	8.2	2,000 [945]
	RCBA-6089 (RBHA-24)	56,500 [16.56]	43,600 [12.78]	12,900 [3.78]	9.70	10.20	8.2	2,000 [945]
	RCBA-6089 (RBHC-24)	56,000 [16.41]	43,200 [12.66]	12,800 [3.75]	9.45	10.00	8.2	1,925 [910]
	RCBA-6089 (RBHC-26)	55,500 [16.27]	42,800 [12.54]	12,700 [3.73]	9.35	10.00	8.2	1,825 [860]
	RCBA-6089 + RXMD-C02	56,000 [16.41]	43,100 [12.63]	12,900 [3.78]	9.45	10.10	8.2	2,000 [945]
	RCBA-6089 + RXMD-C02 (RBHA-24)	56,500 [16.56]	43,600 [12.78]	12,900 [3.78]	9.70	10.30	8.2	2,000 [945]
	RCBA-6089 + RXMD-C02 (RBHC-24)	56,000 [16.41]	43,200 [12.66]	12,800 [3.75]	9.45	10.10	8.2	1,925 [910]
	RCBA-6089 + RXMD-C02 (RBHC-26)	55,500 [16.27]	42,800 [12.54]	12,700 [3.73]	9.35	10.00	8.2	1,825 [860]
	RCGA-60A1	55,500 [16.27]	40,865 [11.98]	14,635 [4.29]	9.40	10.00	8.2	2,000 [945]
	RCGA-60A1 (RBHA-24)	56,000 [16.41]	41,365 [12.12]	14,635 [4.29]	9.60	10.15	8.2	2,000 [945]
	RCGA-60A1 (RBHC-24)	55,500 [16.27]	41,000 [12.02]	14,500 [4.25]	9.35	10.10	8.2	1,925 [910]
	RCGA-60A1 (RBHC-26)	55,000 [16.12]	40,600 [11.90]	14,400 [4.22]	9.25	10.00	8.2	1,825 [860]
	RCHA-60A1	55,500 [16.27]	40,865 [11.98]	14,635 [4.29]	9.40	10.00	8.2	2,000 [945]
	RCHA-60A1 (RBHA-24)	56,000 [16.41]	41,365 [12.12]	14,635 [4.29]	9.60	10.15	8.2	2,000 [945]
	RCHA-60A1 (RBHC-24)	55,500 [16.27]	41,000 [12.02]	14,500 [4.25]	9.35	10.10	8.2	1,925 [910]
	RCHA-60A1 (RBHC-26)	55,000 [16.12]	40,600 [11.90]	14,400 [4.22]	9.25	10.00	8.2	1,825 [860]
	RCQB-C060	57,000 [16.71]	42,500 [12.46}	14,500 [4.25]	9.10	10.10	8.2	2,000 [945]
	RCQB-C060 (RHQA-20)	57,000 [16.71]	42,500 [12.46}	14,500 [4.25]	9.10	10.15	8.2	2,000 [945]
	RCTB-B060 (RHQA-20)	54,500 [15.97]	41,200 [12.07]	13,300 [3.90]	9.40	10.00	8.2	1,950 [920]

① Highest sales volume tested combination required by D.O.E. test procedures.

[ ] Designates Metric Conversions

Performance Data @ ARI Standard Conditions—Cooling (Con't.)

Model Numbers		80°F [26.5°C] DB/67°F [19.5°C] WB Indoor Air 95°F [35°C] DB Outdoor Air					Sound Rating	Indoor CFM [L/s]
Outdoor Unit RAKA-	Indoor Coil and/or Air Handler	Total Capacity BTU/H [kW]	Net Sensible BTU/H [kW]	Net Latent BTU/H [kW]	EER	SEER		
060CAZ/DAZ/ JAZ/YAS	RCBA-6089 ①	56,000 [16.41]	43,100 [12.63]	12,900 [3.78]	9.45	10.00	8.2	2,000 [945]
	RCBA-6089 (RBHA-24)	56,500 [16.56]	43,600 [12.78]	12,900 [3.78]	9.70	10.20	8.2	2,000 [945]
	RCBA-6089 (RBHC-24)	57,500 [16.85]	41,300 [12.10]	16,200 [4.75]	9.15	10.00	8.2	1,925 [910]
	RCBA-6089 (RBHC-26)	57,000 [16.71]	40,900 [11.99]	16,100 [4.72]	9.05	10.00	8.2	1,825 [860]
	RCBA-6089 + RXMD-C02	56,000 [16.41]	43,100 [12.63]	12,900 [3.78]	9.45	10.10	8.2	2,000 [945]
	RCBA-6089 + RXMD-C02 (RBHA-24)	56,500 [16.56]	43,600 [12.78]	12,900 [3.78]	9.70	10.30	8.2	2,000 [945]
	RCBA-6089 + RXMD-C02 (RBHC-24)	57,500 [16.85]	41,300 [12.10]	16,200 [4.75]	9.15	10.10	8.2	1,925 [910]
	RCBA-6089 + RXMD-C02 (RBHC-26)	57,000 [16.71]	40,900 [11.99]	16,100 [4.72]	9.05	10.00	8.2	1,825 [860]
	RCGA-60A1	55,500 [16.27]	40,865 [11.98]	14,635 [4.29]	9.40	10.00	8.2	2,000 [945]
	RCGA-60A1 (RBHA-24)	56,000 [16.41]	41,365 [12.12]	14,635 [4.29]	9.60	10.15	8.2	2,000 [945]
	RCGA-60A1 (RBHC-24)	57,000 [16.71]	40,900 [11.99]	16,100 [4.72]	9.15	10.00	8.2	1,925 [910]
	RCGA-60A1 (RBHC-26)	56,500 [16.56]	40,500 [11.87]	16,000 [4.69]	9.05	10.00	8.2	1,825 [860]
	RCHA-60A1	55,500 [16.27]	40,865 [11.98]	14,635 [4.29]	9.40	10.00	8.2	2,000 [945]
	RCHA-60A1 (RBHA-24)	56,000 [16.41]	41,365 [12.12]	14,635 [4.29]	9.60	10.15	8.2	2,000 [945]
	RCHA-60A1 (RBHC-24)	57,000 [16.71]	40,900 [11.99]	16,100 [4.72]	9.15	10.00	8.2	1,925 [910]
	RCHA-60A1 (RBHC-26)	56,500 [16.56]	40,500 [11.87]	16,000 [4.69]	9.05	10.00	8.2	1,825 [860]
	RCQB-C060	57,000 [16.71]	42,500 [12.46]	14,500 [4.25]	9.10	10.10	8.2	2,000 [945]
	RCQB-C060 (RHQA-20)	57,000 [16.71]	42,500 [12.46]	14,500 [4.25]	9.10	10.15	8.2	2,000 [945]

Electrical and Physical Data

Model Number RAKA-	ELECTRICAL							PHYSICAL					
	Phase Hertz Volts	Compr. (RLA)	Compr. (LRA)	Fan Motor (FLA)	Min. Circuit Ampacity Amperes	Fuse or HACR Circuit Breaker		Outdoor Coil			R22 Oz. [g]	Weight	
						Min. Amperes	Max. Amperes	Face Area Sq. Ft. [m²]	No. Rows	CFM [L/s]		Net Lbs. [kg]	Shipping Lbs. [kg]
018JA	1-60-208-230	9.7/9.7	50	.9	13/13	20/20	20/20	5.0 [.465]	1.00	1850 [873]	46 [1304]	135 [61.2]	145 [65.8]
024JA	1-60-208-230	12.2/12.2	61	.9	16/16	20/20	25/25	6.1 [.567]	1.00	1950 [920]	50 [1417]	140 [63.5]	150 [68.0]
030JA	1-60-208-230	14.1/14.1	76	.9	19/19	25/25	30/30	9.1 [.845]	1.00	1960 [925]	66 [1871]	155 [70.3]	165 [74.8]
037CA	3-60-208-230	10.3/10.3	77	1.3	14/14	20/20	20/20	11.0 [1.022]	1.00	2700 [1274]	79 [2240]	180 [81.6]	190 [86.2]
037DA	3-60-460	5.1	39	.6	7	15	15	11.0 [1.022]	1.00	2700 [1274]	79 [2240]	180 [81.6]	190 [86.2]
037JA	1-60-208-230	16.5/16.5	95	1.3	22/22	30/30	35/35	11.0 [1.022]	1.00	2700 [1274]	79 [2240]	180 [81.6]	190 [86.2]
042CAS	3-60-208-230	14.1/14.1	130	1.3	19/19	25/25	30/30	11.0 [1.022]	1.00	2700 [1274]	79 [2240]	190 [86.2]	200 [90.7]
042CAZ	3-60-208-230	12.4/12.4	88	1.3	17/17	20/20	25/25	11.0 [1.022]	1.00	2700 [1274]	79 [2240]	190 [86.2]	200 [90.7]
042DAS	3-60-460	7.1	64	.6	10	15	15	11.0 [1.022]	1.00	2700 [1274]	79 [2240]	190 [86.2]	200 [90.7]
042DAZ	3-60-460	6.4	44	.6	9	15	15	11.0 [1.022]	1.00	2700 [1274]	79 [2240]	190 [86.2]	200 [90.7]
042JA	1-60-208-230	18.3/18.3	109	1.3	24/24	30/30	40/40	11.0 [1.022]	1.00	2700 [1274]	79 [2240]	190 [86.2]	200 [90.7]
048CAS	3-60-208-230	13.7/13.7	82	2.0	20/20	25/25	30/30	15.8 [1.468]	1.00	4100 [1935]	113 [3203]	220 [99.8]	230 [104.3]
048CAZ	3-60-208-230	13.5/13.5	91	2.0	19/19	25/25	30/30	15.8 [1.468]	1.00	4100 [1935]	103 [2920]	220 [99.8]	230 [104.3]
048DAS	3-60-460	6.9	41	1.0	10	15	15	15.8 [1.468]	1.00	4100 [1935]	113 [3203]	220 [99.8]	230 [104.3]
048DAZ	3-60-460	6.8	46	1.0	10	15	15	15.8 [1.468]	1.00	4100 [1935]	103 [2920]	220 [99.8]	230 [104.3]
048JA	1-60-208-230	21.9/21.9	131	2.0	29/29	35/35	50/50	15.8 [1.468]	1.00	4100 [1935]	103 [2920]	220 [99.8]	230 [104.3]
048YA	3-60-575	5.2	36	.7	8	15	15	15.8 [1.468]	1.00	4100 [1935]	113 [3203]	220 [99.8]	230 [104.3]
060CAS	3-60-208-230	17.0/17.0	150	2.0	24/24	30/30	40/40	15.8 [1.468]	1.00	4150 [1959]	112 [3175]	250 [113.4]	260 [117.9]
060CAZ	3-60-208-230	17.2/17.2	128	2.0	24/24	30/30	40/40	15.8 [1.468]	1.00	4150 [1959]	112 [3175]	250 [113.4]	260 [117.9]
060DAS	3-60-460	9.6	73	1.0	13	20	20	15.8 [1.468]	1.00	4150 [1959]	112 [3175]	250 [113.4]	260 [117.9]
060DAZ	3-60-460	9.1	63	1.0	12/12	15	20	15.8 [1.468]	1.00	4150 [1959]	112 [3175]	250 [113.4]	260 [117.9]
060JA	1-60-208-230	28.9/28.9	169	2.0	39/39	50/50	60/60	15.8 [1.468]	1.00	4150 [1959]	112 [3175]	250 [113.4]	260 [117.9]
060YA	3-60-575	8.3	59	.7	12	15	15	15.8 [1.468]	1.00	4150 [1959]	112 [3175]	250 [113.4]	260 [117.9]

[ ] Designates Metric Conversions

Unit Dimensions

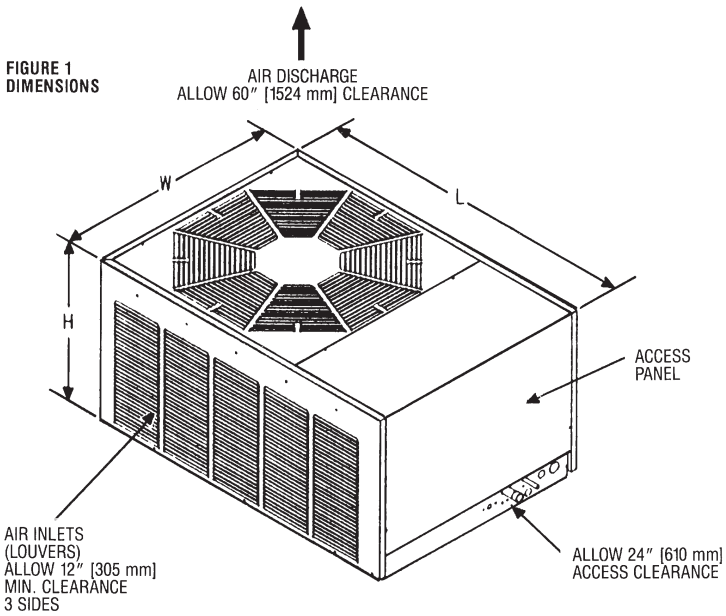

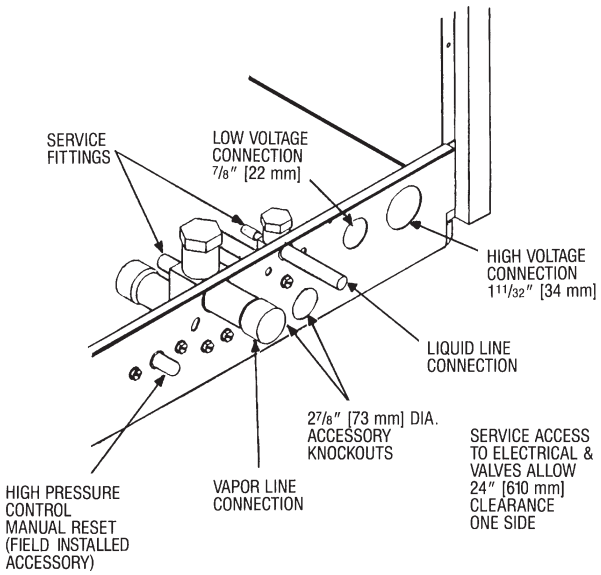

Model Number RAKA-	Height "H" (Inches) [mm]	Length "L" (Inches) [mm]	Width "W" (Inches) [mm]
-018/024	16 3/4 [425.45]	33 11/16 [855.66]	23 1/4 [590.55]
-030	20 3/4 [527.05]	33 11/16 [855.66]	23 1/4 [590.55]
-036/-037/-042	20 3/4 [527.05]	38 11/16 [982.66]	27 1/8 [688.98]
-048/-060	26 3/4 [679.45]	42 9/16 [1081.09]	31 [787.4]

[ ] Designates Metric Conversions

Piston Sizes

(Part Number 61-23414-)**

Model Size	Evaporator Coil Piston Size
-018	53
-024	57
-030	65
-037	65
-042	73
-048	82
-060	89

GENERAL TERMS OF LIMITED WARRANTY

Rheem will furnish a replacement for any part of this product which fails in normal use and service within the applicable period stated, in accordance with the terms of the limited warranty.

For Complete Details of the Limited Warranty, Including Applicable Terms and Conditions, See Your Local Installer or Contact the Manufacturer for a Copy.

Compressor .....Five (5) Years
*Any Other Part .....Five (5) Years
Condenser Coil leaks caused by
factory defects.....Five (5) Years

***This five year limited warranty is applicable only to single-phase products installed in residential applications on or after January 1, 2001.**

Condensing Unit Refrigerant Line Size Information

System Capacity Tons [kW]	Line Size (Inch O.D.) [mm]	Liquid Line Size Outdoor Unit Above Indoor Coil — Total Length—Feet [m]						Liquid Line Size Outdoor Unit Below Indoor Coil — Total Length—Feet [m]					
		25 [7.62]	50 [15.24]	75 [22.86]	100 [30.48]	125 [38.10]	150 [45.72]	25 [7.62]	50 [15.24]	75 [22.86]	100 [30.48]	125 [38.10]	150 [45.72]
		Vertical Separation—Feet [m]						Vertical Separation—Feet [m]					
1.5 [5.28]	1/4* [6.35]	25 [7.62]	50 [15.24]	70 [21.34]				25 [7.62]	23 [7.01]	8 [2.44]			
	5/16 [7.94]			36 [10.97]	42 [12.80]	48 [14.63]	54 [16.46]			36 [10.97]	30 [9.14]	24 [7.32]	18 [5.49]
2 [7.03]	1/4* [6.35]	25 [7.62]	50 [15.24]					25 [7.62]	23 [7.01]				
	5/16 [7.94]		24 [7.32]	34 [10.36]	44 [13.41]	54 [16.46]	64 [19.51]		48 [14.63]	38 [11.58]	28 [8.53]	18 [5.49]	8 [2.44]
2.5 [8.79]	1/4* [6.35]	25 [7.62]	50 [15.24]					25 [7.62]	23 [7.01]				
	5/16 [7.94]		19 [5.79]	33 [10.06]	47 [14.33]	61 [18.59]			50 [15.24]	39 [11.89]	25 [7.62]	11 [3.35]	
	3/8 [9.53]					11 [3.35]	15 [4.57]						57 [17.37]
3 [10.55]	5/16* [7.94]	25 [7.62]	50 [15.24]	70 [21.34]				25 [7.62]	23 [7.01]	9 [2.74]			
	3/8 [9.53]			34 [10.36]	40 [12.19]	46 [14.02]	52 [15.85]			38 [11.58]	32 [9.75]	26 [7.92]	20 [6.10]
3.5 [12.30]	5/16* [7.94]	25 [7.62]	50 [15.24]	75 [22.86]				25 [7.62]	23 [7.01]	9 [2.74]			
	3/8 [9.53]			32 [9.75]	39 [11.89]	46 [14.02]	53 [16.15]			40 [12.19]	33 [10.06]	26 [7.92]	19 [5.79]
4 [14.06]	3/8* [9.53]	25 [7.62]	44 [13.41]	53 [16.15]	61 [18.59]	70 [21.34]		25 [7.62]	28 [8.53]	19 [5.79]	11 [3.35]	3 [.91]	
	1/2 [12.7]					37 [11.28]	39 [11.89]					35 [10.67]	33 [10.06]
5 [17.58]	3/8* [9.53]	25 [7.62]	48 [14.63]	61 [18.59]	72 [21.95]			25 [7.62]	23 [7.01]	11 [3.35]	3 [.91]		
	1/2 [12.7]				35 [10.67]	38 [11.58]	41 [12.50]				37 [11.28]	34 [10.36]	31 [9.45]

*Standard line size

NOTES:

① This chart is applicable for condensing units.

② If the separation height exceeds the table values, **reduce** the indoor coil flow-check piston two sizes plus one size for each additional 10 feet [3.05 m].
Example 1: A 5 ton [17.58 kW] *condensing unit* with a total line length of 125 feet [38.10 m] with a vertical separation of 101 feet [30.78 m] utilizing a 1/2" [12.7 mm] liquid line: Table = 38 feet [11.58 m] maximum vertical separation for 125 feet [38.10 m] run. Separation exceeds table by (101-38) = 63 feet [19.20 m]. Therefore, reduce the indoor coil flow-check piston 2 + 6 = 8 sizes (For example, a #89 piston would reduce to a #81 piston)

③ Do not exceed 120 feet [36.58 m] maximum vertical separation.

④ No changes are required for expansion valve coils.

⑤ Do not exceed table values for capillary tube coils.

⑥ Always use the smallest liquid line possible to minimize system charge.

⑦ Chart may be used to size horizontal runs.

NOTES:

① This chart is applicable for condensing units.
Example 1: A 2.5 ton [8.79 kW] *condensing unit* with a total line length of 75 feet [22.86 m] with a vertical separation of 30 feet [9.14 m] requires a liquid line size of 5/16" [7.94 mm].

② This chart may also be used to size horizontal runs.
Example 2: A 5 ton [17.58 kW] *condensing unit* may have a total horizontal run of 100 feet [30.48 m] if using the 3/8" [9.53 mm] liquid line. The total horizontal run if using 1/2" [12.7 mm] liquid line size will be 150 feet [45.72 m]

③ Do not exceed vertical separation as indicated on the chart.

④ Always use the smallest liquid line possible to minimize system charge.

⑤ No changes required for flow-check pistons or expansion valve coils.

Suction Line Length/Size versus Capacity Multiplier								
RAKA-		018	024	030	036/037	042	048	060
Unit Suction Line Connection Size		5/8" [15.88 mm] I.D. Sweat	3/4" [19.05 mm] I.D. Sweat				1 1/8" [28.58 mm] I.D. Sweat*	
Suction Line Run—Feet [m]		5/8" [15.88 mm] O.D. Standard 3/4" [19.05 mm] O.D. Optional	5/8" [15.88 mm] O.D. Optional 3/4" [19.05 mm] O.D. Standard 7/8" [22.23 mm] O.D. Optional				7/8" [22.23 mm] O.D. Optional 1 1/8" [28.58 mm] O.D. Standard 1 3/8" [34.94 mm] O.D. Optional	
25' [7.62]	Optional	—	.98	—	—	—	.99	.99
	Standard	1.00	1.00	1.00	1.00	1.00	1.00	1.00
	Optional	1.01	1.01	1.01	1.01	1.01	1.01	1.01
50' [15.24]	Optional	—	.96	—	—	—	.97	.97
	Standard	.98	.99	.99	.98	.97	1.00	.99
	Optional	1.00	1.00	1.00	1.00	1.00	1.01	1.01
100' [30.48]	Optional	—	.93	—	—	—	.96	.95
	Standard	.96	.98	.97	.96	.94	.99	.99
	Optional	.99	.99	.99	.99	.98	1.00	1.00
150' [45.72]	Optional	—	—	—	—	—	.93	.91
	Standard	.97	.97	.95	.93	.90	.99	.98
	Optional	.98	.98	.97	.97	.96	1.00	.99

NOTES: Capacity Multiplier x Rated Capacity = Actual Capacity.
Additional compressor oil is not required for runs up to 150 feet [45.72 m].
Oil traps in vertical runs are not required for any height up to 100 feet [30.48 m]. See Liquid Line chart for Vertical Separation Requirements and Limitations.
*Adapter to 1 1/8" [28.58 mm] factory supplied.

[ ] Designates Metric Conversions

Before proceeding with installation, refer to installation instructions packaged with each model, as well as complying with all Federal, State, Provincial, and Local codes, regulations, and practices.

RHEEM
AIR CONDITIONING
DIVISION

5600 Old Greenwood Road, Fort Smith, Arkansas 72908

"In keeping with its policy of continuous progress and product improvement, Rheem reserves the right to make changes without notice."

PRINTED IN U.S.A. 3-02 DC

FORM NO. A11-147 REV. 9
Supersedes Form No. A11-147 Rev. 8